Rapid Rollerdoor

Order Width (m)	Fabric Width (m)
2.5	2.5
3.0	3.0
3.5	3.5
4.0	4.0
4.5	4.5
5.0	5.0
5.5	5.5
6.0	6.0
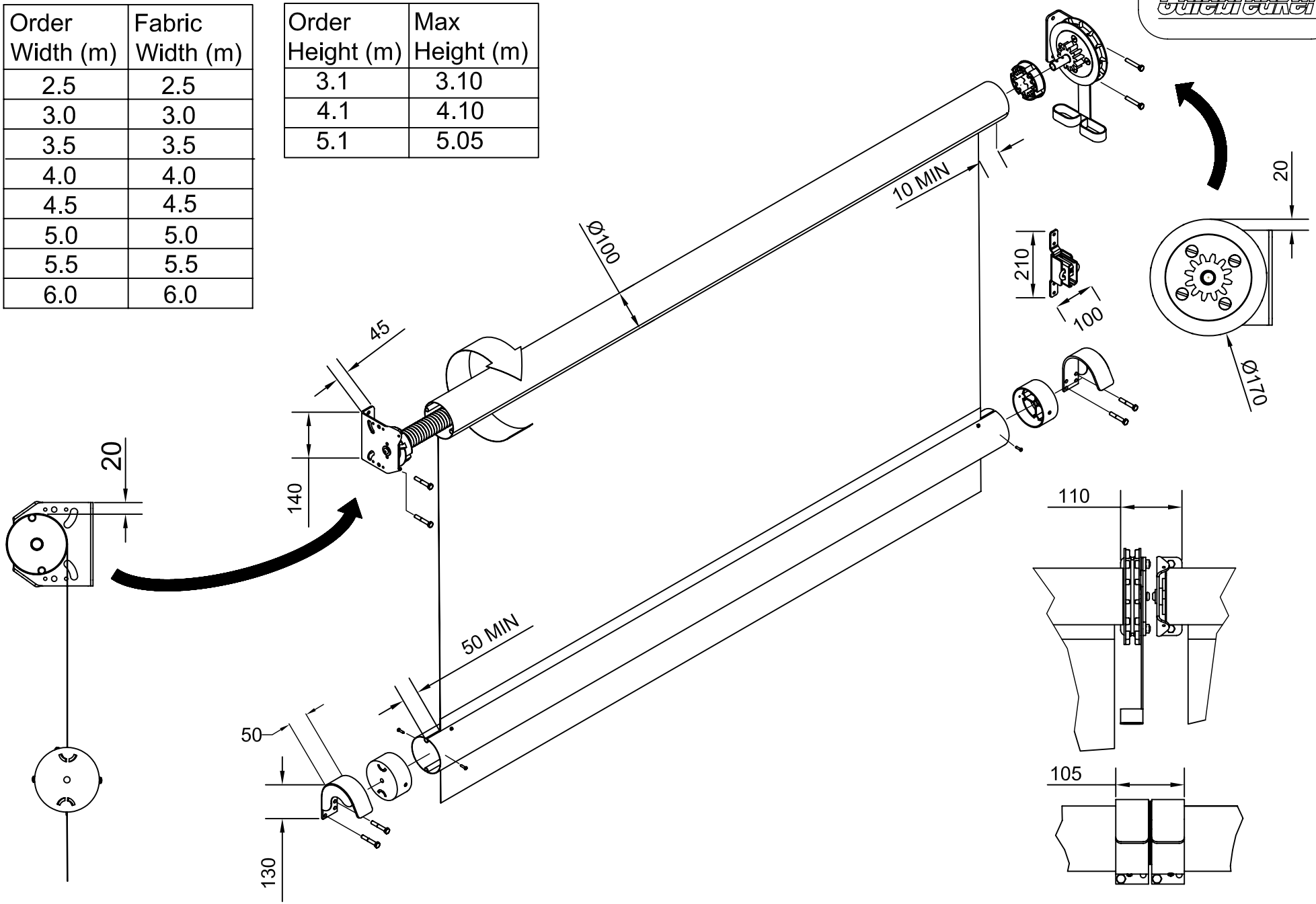
Order Height (m)	Max Height (m)
3.1	3.10
4.1	4.10
5.1	5.05